Hearses and Hand-held Calculators:

The unlikely connections that shaped modern technology and tech-culture

ELSTAAT™
Amigo!
TELSTAR
BUSTOUT
✔ 4K RAM!
✔ 128-BIT GRAPHICS
✔ 300-MEGABAUD CASSETTE
✔ PLUS/4 GAME PAK

Microsoft

MICROSOFT

MICRO SOFT

Microsoft

WHERE DO YOU WANT TO GO TODAY?™

C
AUTO KB CLR

commodore
7 8 9
4 5 6
1 2 3
0 00 000
NA
S
T
+

60c ■ MAY 1967

Radio-Electronics

TELEVISION · SERVICING · HIGH FIDELITY

HUGO GERNSBACK, Editor-in-chief

A GERNSBACK PUBLICATION

EXTRA SECTION
Space & Underseas ELECTRONICS

Indianapolis 500 Driver-Reaction Tests

Underwater Communicator

World's Most Complex R/C Job

DESK TOP COMPUTERS

WILMINGTON INSTITUTE
APR 15 1967

New generation . . . What they ... work

132 ELECTRONIC CALCULATOR
OVER FLOW LOCK
CLEAR ENTRY
CLEAR DISPLAY
CHANGE SIGN
ENTER
STORE
REPEAT
RECALL
DECIMAL POINT

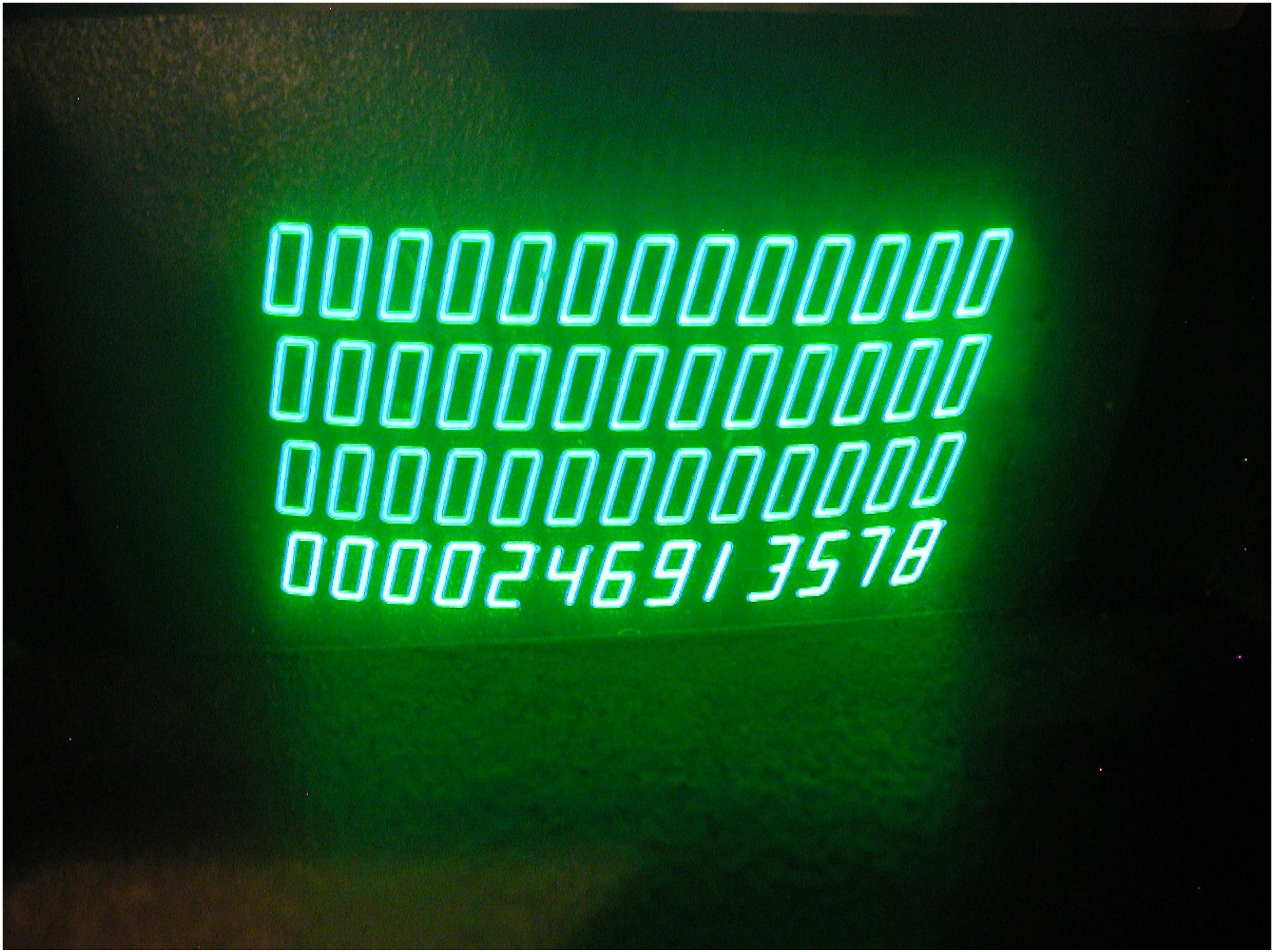
0000000000
0000000000
0000000000
0002469135 78

SINGER

CASIO-MINI
ELECTRONIC CALCULATOR
7
8
9
C
4
5
6
÷
1
2
3
×
0
−
=+

7
8
9
C
4
5
6
÷
1
2
3
×
0
=+
CASIO-MINI
ELECTRONIC CALCULATOR

maxell
LR6(GD)/AA/1.5V
08-2018
NO MERCURY AND CA
ADE IN JAPAN
<WARNING> Do not dispose of in fire, recharge,
put in backwards, disassemble, short-
circuit, mix with used or other battery
types. May explode or leak and cause
EU
Maxell, Ltd.
China Fabriqué en Chine

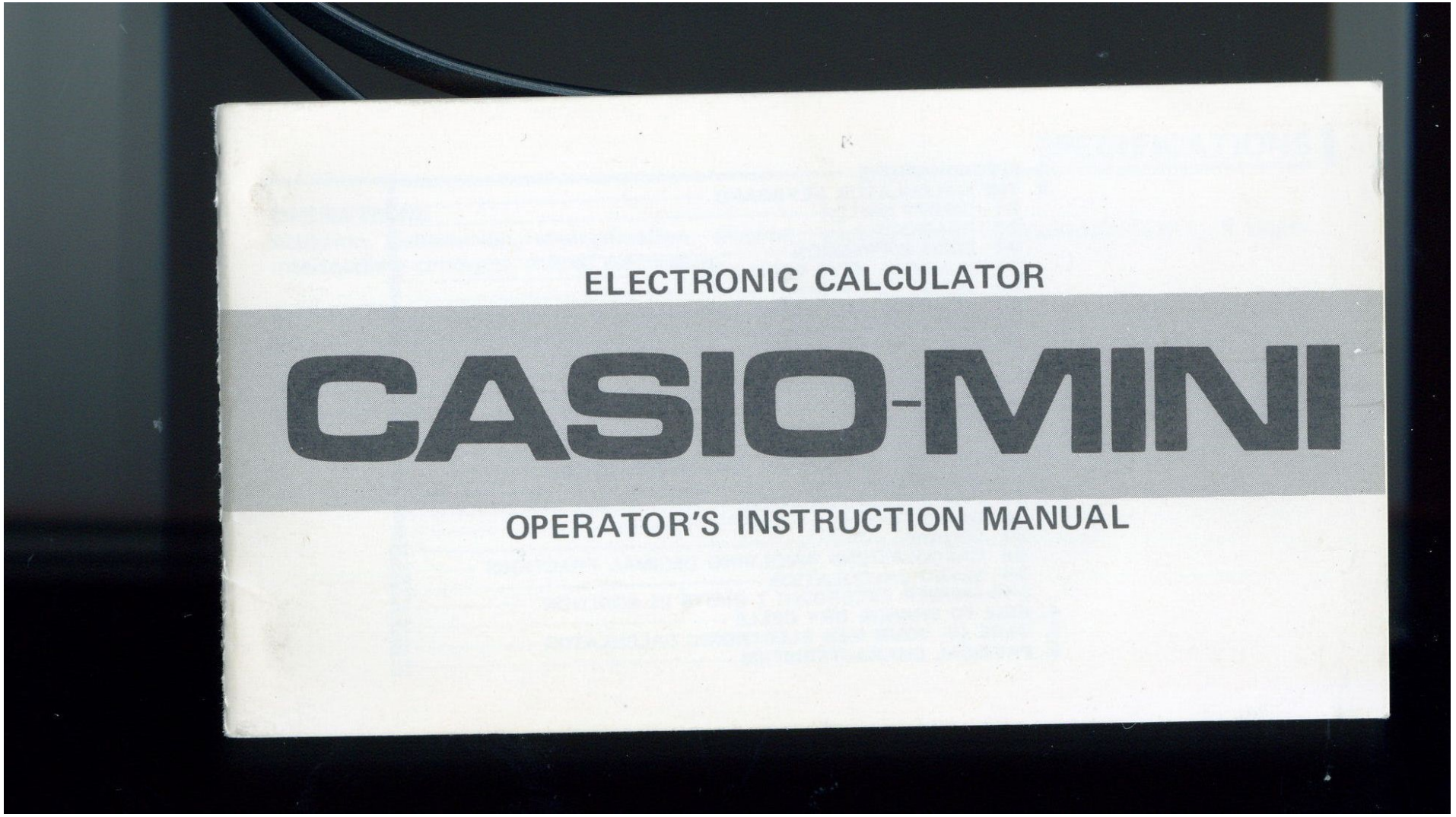
ELECTRONIC CALCULATOR
CASIO-MINI
OPERATOR'S INSTRUCTION MANUAL

cbm

Texas Instruments
TI-1200

THE 1440

build it yourself

A calculator with memory, square root and other new features

by JAMES R. KELLAHIN*

FOR THE FIRST TIME EVER, IT'S POSSIBLE for anyone who can operate a soldering iron to assemble an electronic desk calculator with a fully accessible memory. The calculator is the MITS 1400, a commercially available kit, and the memory can store any 14-digit number fed into it.

Memory is but one of this calculator's attractions, since in addition to its ability to handle conventional arithmetic functions it also has keys for square and square root. These memory capable of storing and recalling a 14-digit bit.

To see how the various MOS LSI chips are interconnected within the machine, we'll start with the keyboard. Input to the calculator is provided by a quality keyboard consisting of 27 switches connected in an X-Y array.

Depressing one of the keyboard switches generates a start signal which is received by the scanning action of the INPUT chip. This chip serves several roles. In addition to ignoring contact bounce, it locks out further inputs until an initial input has been pro-

The calculator's internally stored program is contained in the ROM chip, literally an electronic library. Once the proper address for a microprogrammed operational sequence has been fed into the ROM chip, the chip provides the instructions necessary to cycle the problem through the calculator.

The CONTROL LOGIC chip controls the microprogrammed sequences found in the control ROM chip. The chip includes point-position registers, digit-storage register, iteration counter, and a cycle counter. The counters

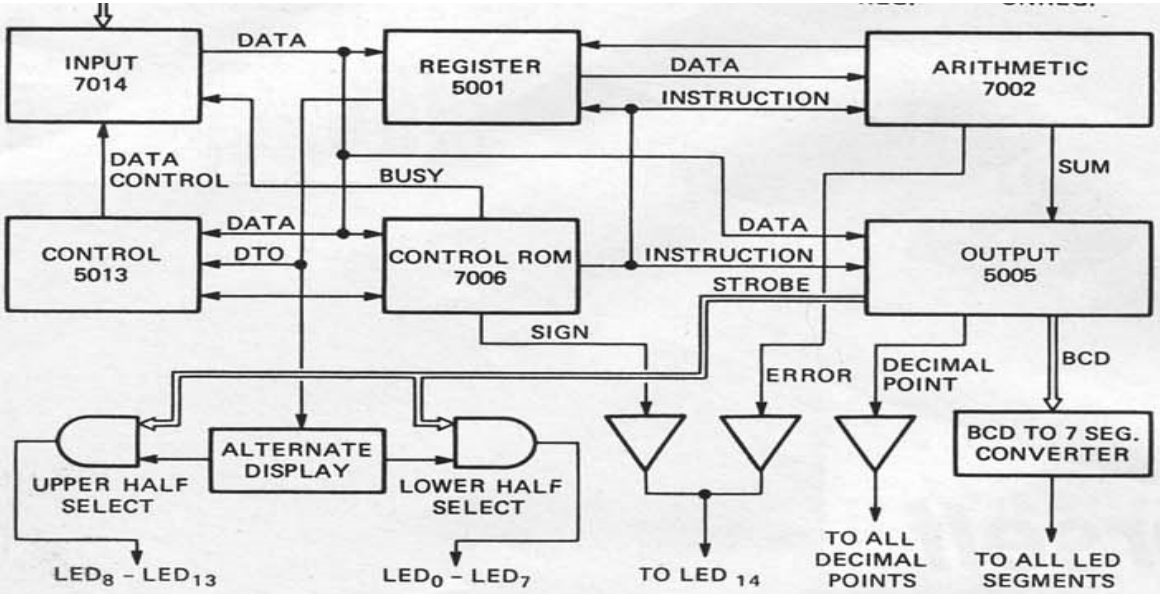

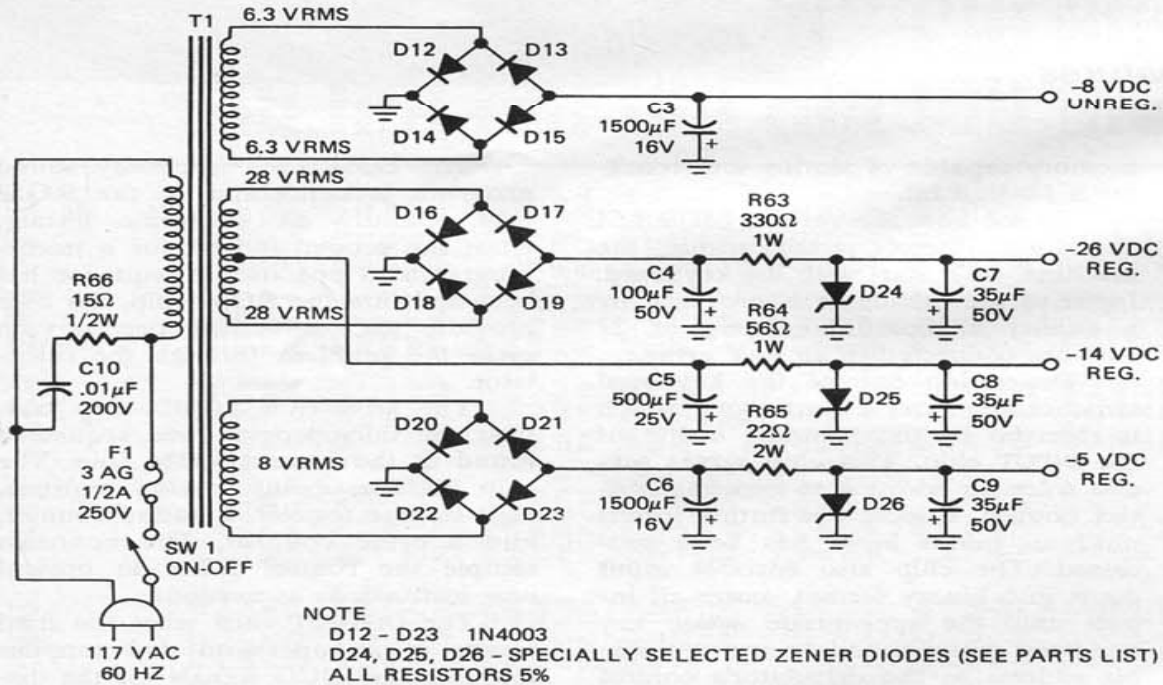

NOTE
D12 - D23 1N4003
D24, D25, D26 - SPECIALLY SELECTED ZENER DIODES (SEE PARTS LIST)
ALL RESISTORS 5%

1440 POWER SUPPLY

such fast operation that the results of a calculation appear on the display before the operator's finger can be removed from the EQUAL key.

Power for the calculator is furnished by three secondary windings on a custom made transformer. The transformer supplies 8V for the LED's, 14 and 26V for the MOS LSI's, and 5V for the TTL IC's. Regulation is provided by selected Zener diodes.

Let's put one together

It's not possible to include all the details of assembling the 1440 in the brief space allotted to a magazine article. So we will only skim over the important highlights here. A complete instruction manual does accompany the kit.

Construction of the calculator is straightforward. Probably the most important consideration is good soldering practice, since sloppy soldering will result in cold connections and possibly solder bridges.

The machine uses four circuit boards which are mounted to a common frame when their assembly is complete. First to be assembled is the CAPACITOR BOARD. This small board contains the seven power supply filter capacitors and is the easiest to complete.

The DISPLAY DRIVER BOARD is assembled next. This board contains 22 transistors, 6 diodes, 37 resistors, and 5 IC's. The transistors are soldered in place, but the IC's plug into low profile sockets. The sockets are quickly soldered to the board and protect the IC's from soldering heat and simplify servicing.

The LED BOARD contains 15 LED digital displays, 14 transistors, and four resistors. It's interesting to note that all but one of the calculator's transistors are 2N2907's. The LED displays are all installed in place and aligned for straightness before being soldered in place. Incorrect installation is impossible, since the LED leads can only be inserted into the board one

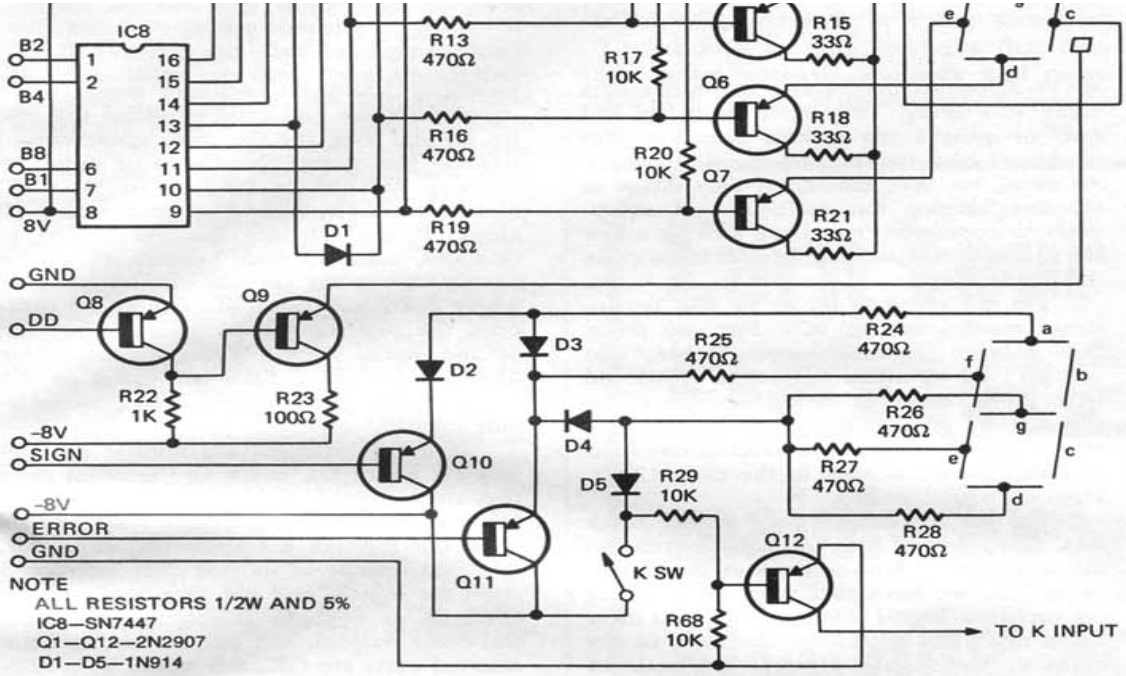

1440 DISPLAY SCHEMATIC

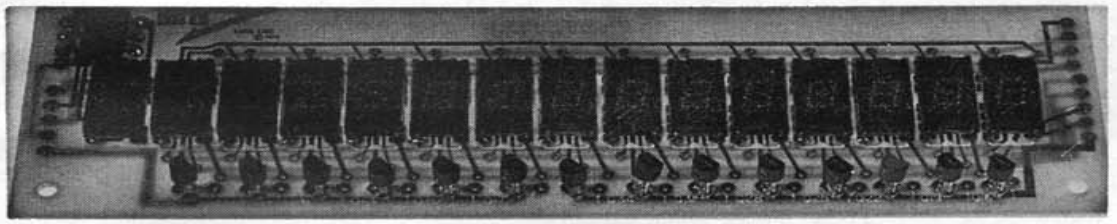

SCHEMATIC OF A BASIC DISPLAY and photo of the assembled display board. There are 15 LED's, fourteen are numeric readouts. The other is for "E" for error and "C" for constant signals.

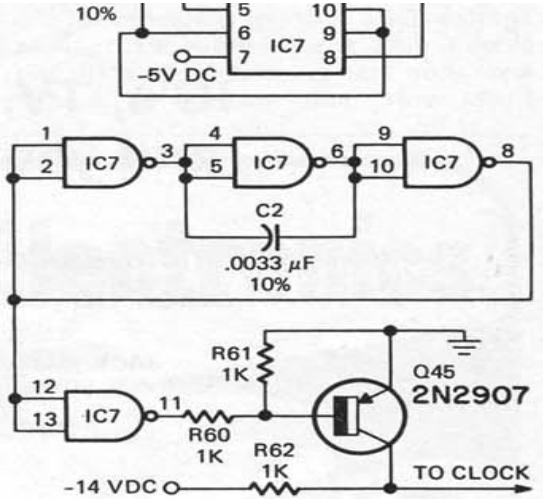

1440 CLOCK

THE CLOCK IN THE 1440. Wiring of the clock IC is shown at top while block diagram and schematic are shown below.

six LSI IC's into their sockets. This prevents the possibility of static electricity damaging the MOS structure of the IC's by shorting all the pins of each IC to one another.

The four calculator boards are connected to one another by the interconnect leads soldered to each board during preliminary assembly. The boards are then mounted to the calculator's base plate and the keyboard is connected. Before the case is attached the calculator must be throughly inspected for possible wiring errors, solder bridges, and bits of stray wire vated for a preliminary operational check. If everything works normally, the case is installed and the calculator is complete.

Using the 1440

Since operations are fed into the calculator algebraically, using the 1440 is as easy as writing a problem out on a sheet of paper. The machine is cleared of all former entries and ready for use as soon as the power switch is activated. The machine can be cleared at any time by simply pressing the C key. To clear an incorrect entry only

been loaded into the machine.

To perform standard arithmetic with the calculator, the keyboard is operated in a logical sequence. Since each key has a single function, no special keyboard manipulations are required as with some commercial calculators on the market. Use of the memory is as simple as pressing the appropriate keys. To store a number in the memory, simply enter the number on the keyboard and press M+. The number can be recalled at any time by pressing MR. Numbers can be added or subtracted from the memory by using the M+ and M– keys.

Flexibility of the 1440 is enhanced by the EXC key. This feature permits the two numbers of an operation to be exchanged with a single key stroke, a particularly valuable feature when the memory is being used.

The 1440 is available as a kit for $199.95. A completely assembled and ready to use unit is $249.95. The assembly and instruction manual that

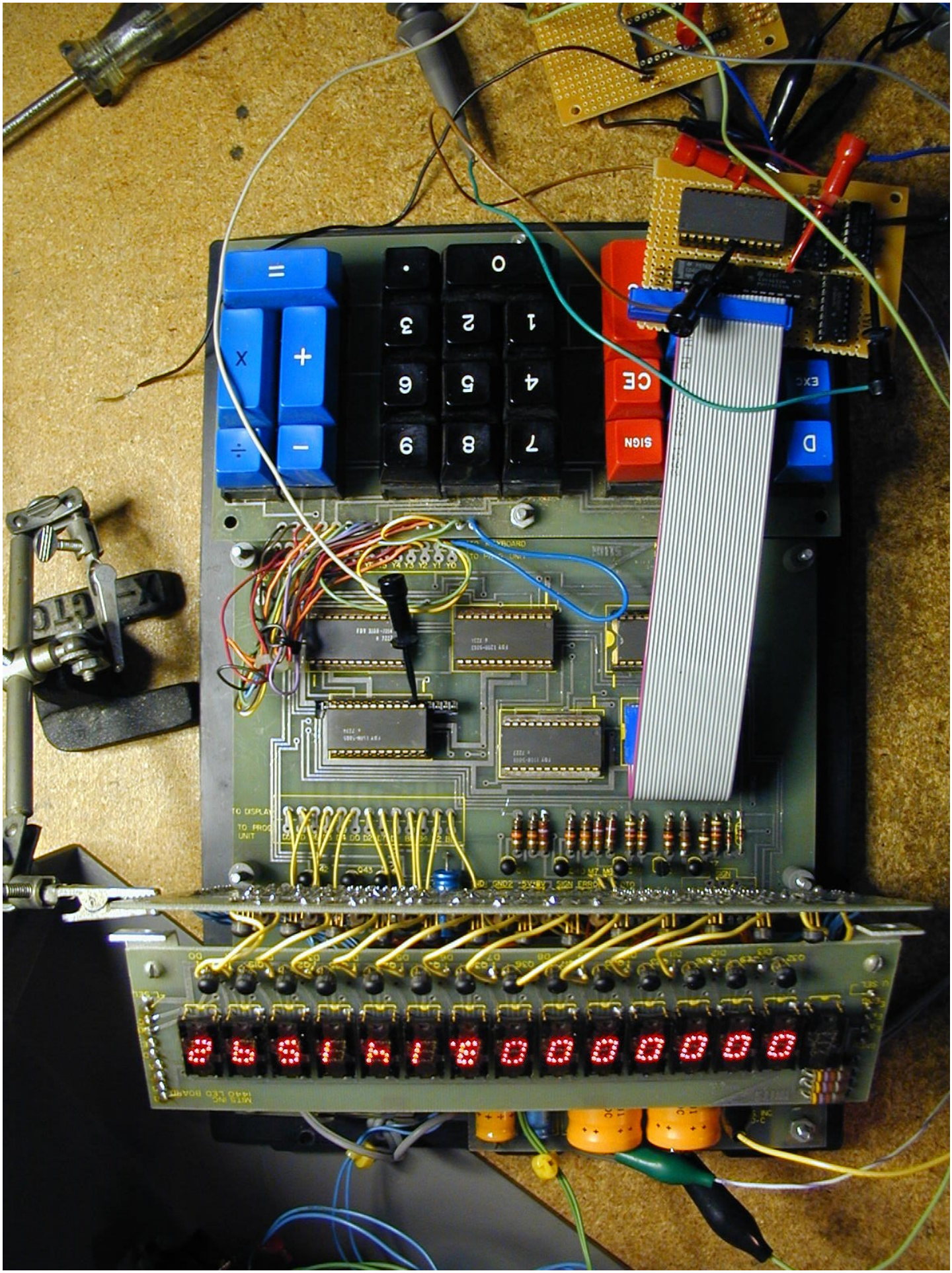
CE
SIGN
D
TO DISPLAY
TO PROG UNIT

AC
K
3.14159265
1440
D
EXC
X²
√X
CM
SIGN
M−
CE
M+
C
MR
7
8
9
4
5
6
1
2
3
0
.
−
÷
+
X
=

HOW TO "READ" FM TUNER SPECIFICATIONS

Popular Electronics

WORLD'S LARGEST-SELLING ELECTRONICS MAGAZINE JANUARY 1975/75¢

PROJECT BREAKTHROUGH!

World's First Minicomputer Kit to Rival Commercial Models...

"ALTAIR 8800" SAVE OVER $1000

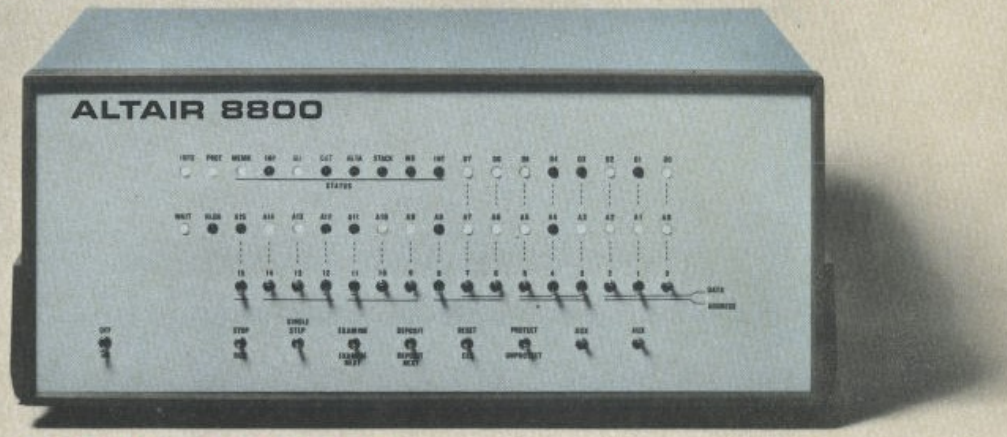

ALSO IN THIS ISSUE:

- An Under-$90 Scientific Calculator Project
- CCD's—TV Camera Tube Successor?
- Thyristor-Controlled Photoflashers

Courtesy oldcomputers.net

Altair BASIC

- BASIC – highly coveted because of the “orders of magnitude” productivity improvement over machine language.
- Paul Allen and Bill Gates from Seattle, going to Harvard at the time 1975.
- When they learned about the Altair from the Popular Electronics article by Les Solomon, they decided to make a BASIC for it. – in 4K leaving operating space.

- Ed Roberts “[we’ll] ..buy the first guy that shows up with one”.

Inside the Amazing ASR 33

... checking out the most popular terminal

Samuel S. Starr
School Lane, River Valley
Rt. 35
Media PA 19063

If you have ever raised the cover of a Model 33 Teletype while it is operating, you might have pulled back involuntarily to avoid the shower of metal parts which seems about to erupt at any moment. Not only does it

SOFTWARE AGREEMENT

This software is copyrighted and the property of MITS, Inc., 2450 Alamo SE, Albuquerque, New Mexico, and has been supplied by MITS to you. This software is furnished subject to the following restrictions: It shall not be reproduced or copied without express written permission of MITS, Inc.

To do any of the above without approval by MITS, Inc., will make you liable and open for MITS, Inc. to take legal action against you.

This agreement shall be considered, accepted, and binding upon your receipt of this and any software.

mits
2450 Alamo SE Albuquerque, NM 87106 505·243-7821

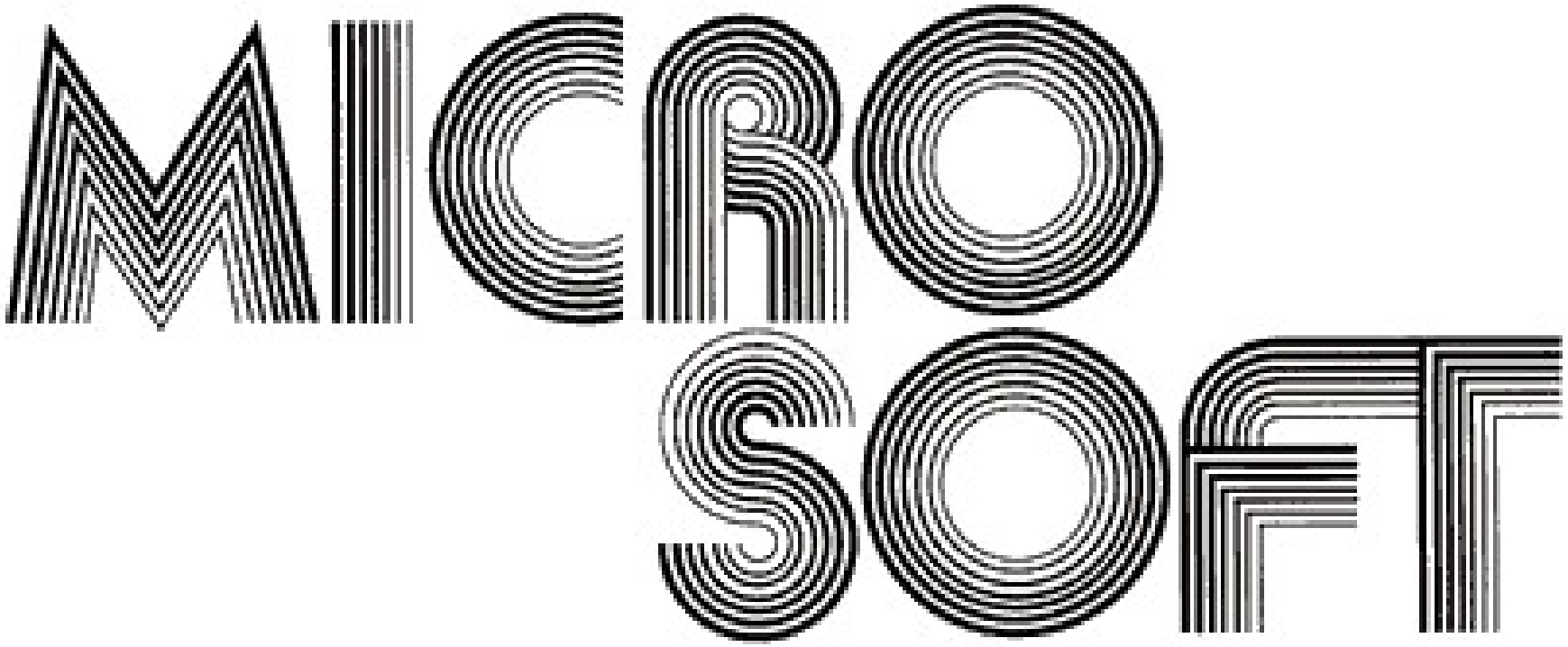
MICROSOFT

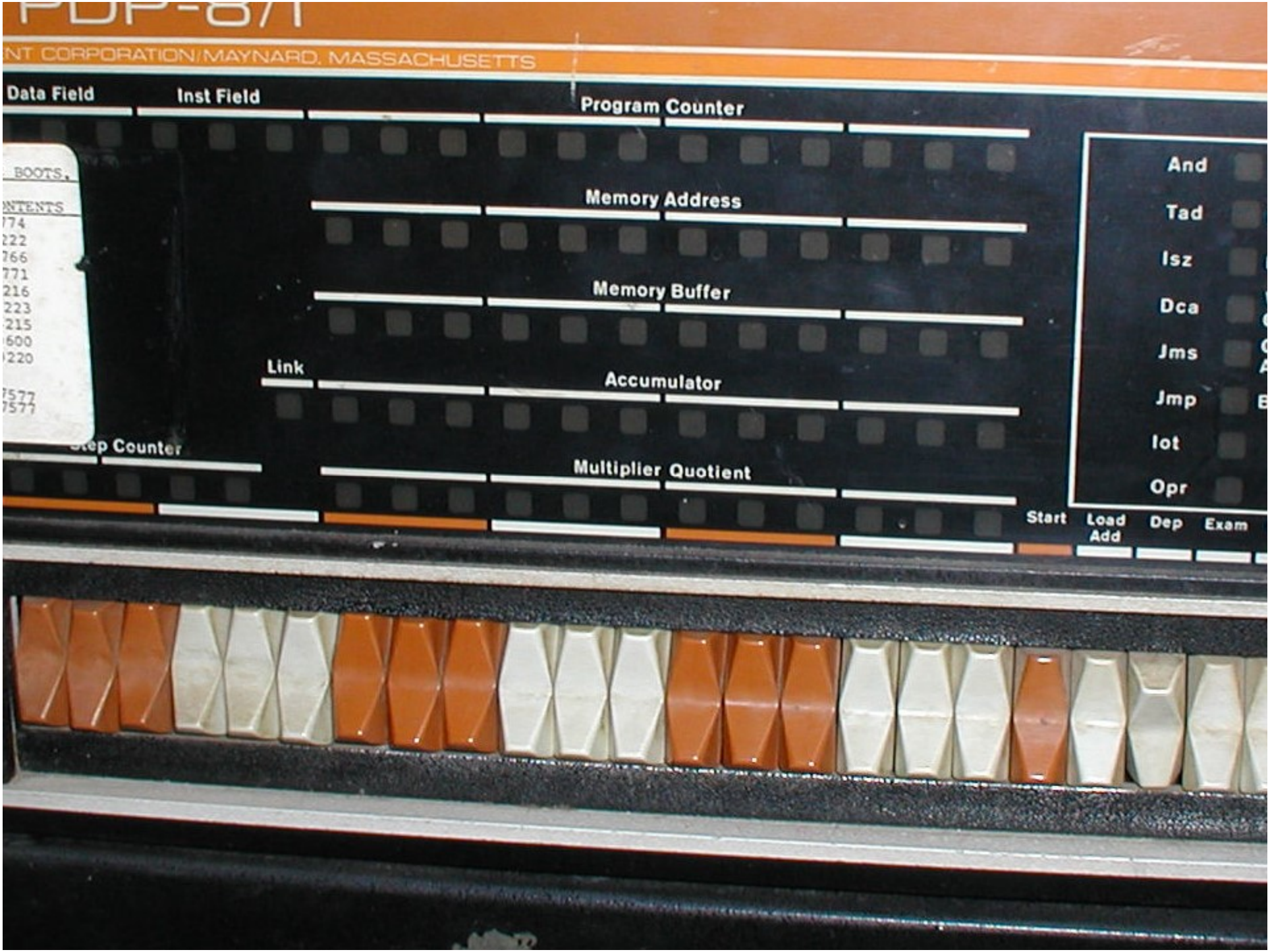
PDP-8/I
NT CORPORATION/MAYNARD, MASSACHUSETTS
Data Field
Inst Field
Program Counter
Memory Address
Memory Buffer
Link
Accumulator
Multiplier Quotient
And
Tad
Isz
Dca
Jms
Jmp
Iot
Opr
Start
Load Add
Dep
Exam

OVERFLOW
EXTEND
HP 1000
M-SERIES COMPUTER
INTERRUPT SYSTEM
PARITY
POWER FAIL
RUN
PRESET
HALT
HEWLETT • PACKARD

Burroughs

A — DISPLAY
1 2 3 4 5 6 7 8 9 10 11 12 13 14 15 16 17 18
B — DISPLAY
1 2 3 4 5 6 7 8 9 10 11 12 13 14 15 16 17 18
COMPARE B DATA FOR SYNC OR HOLD
NULL
OFF
C — DISPLAY
1 2 3 4 5 6 7 8 9
ANY ERROR
SAMPLE INTLK
DISPLAY HOLD
ON
NULL
OFF
COMPARE C DATA FOR GATE OR SAMPLE
DISPLAY
SET CONTROL
TYPE
C COMP PROBE
GATED
4 IN
OFF
HOLD CONTROL
B COMPARE
ANY ERROR
HOLD
OFF
HOLD
OFF
RESET
AUTO
MANUAL
END OP I (A)
OFF
SIGNAL LINES TO DEVICE ADAPTERS
ON = PLUS LEVEL
1 2 3 4
PULSED
5 RESET
ON
OFF

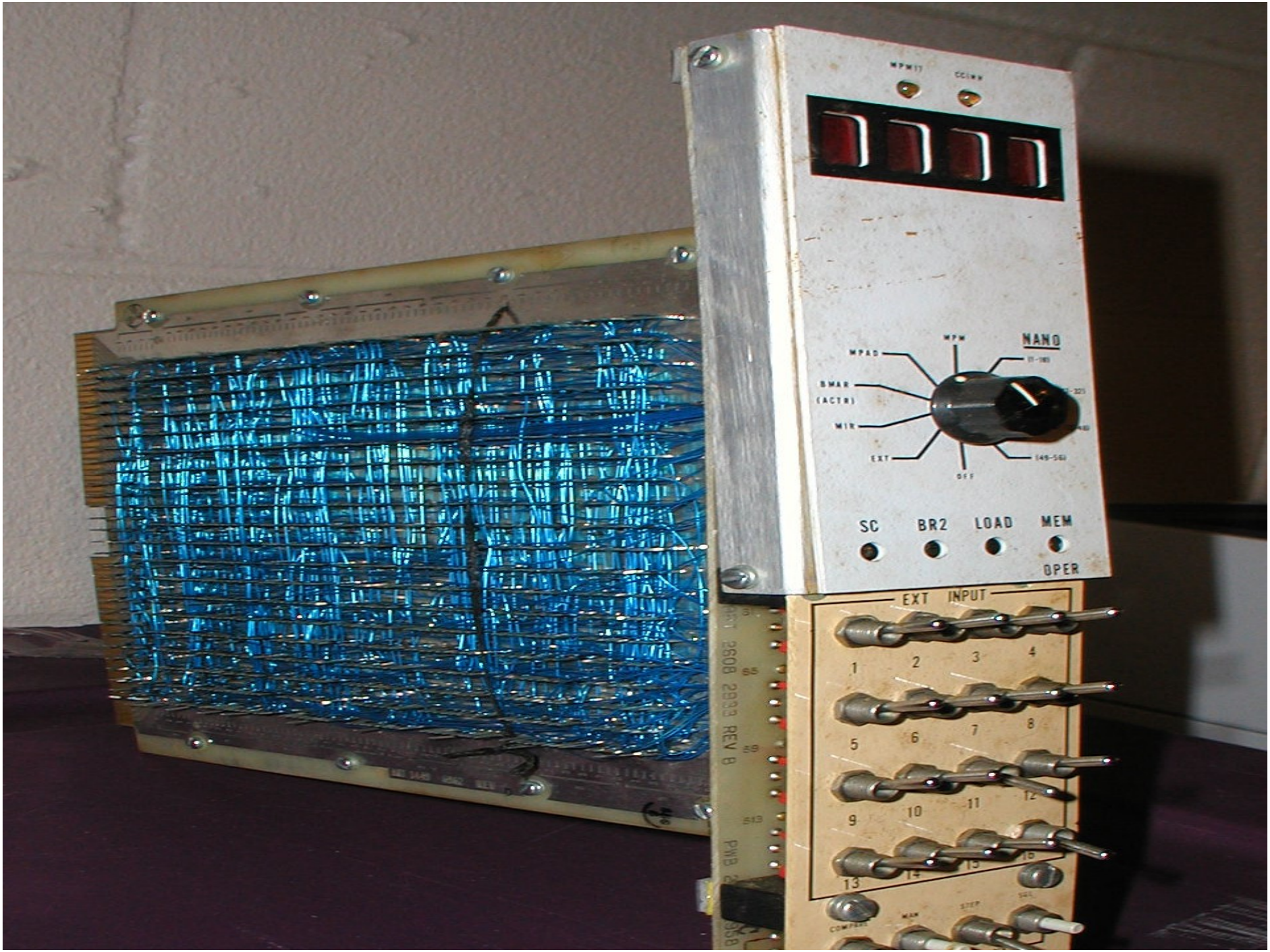
NANO
MPAD
MPM
BMAR
(ACTR)
MIR
EXT
OFF
SC
BR2
LOAD
MEM
OPER
EXT INPUT
1
2
3
4
5
6
7
8
9
10
11
12
13
14
15
16
2608 2933 REV B

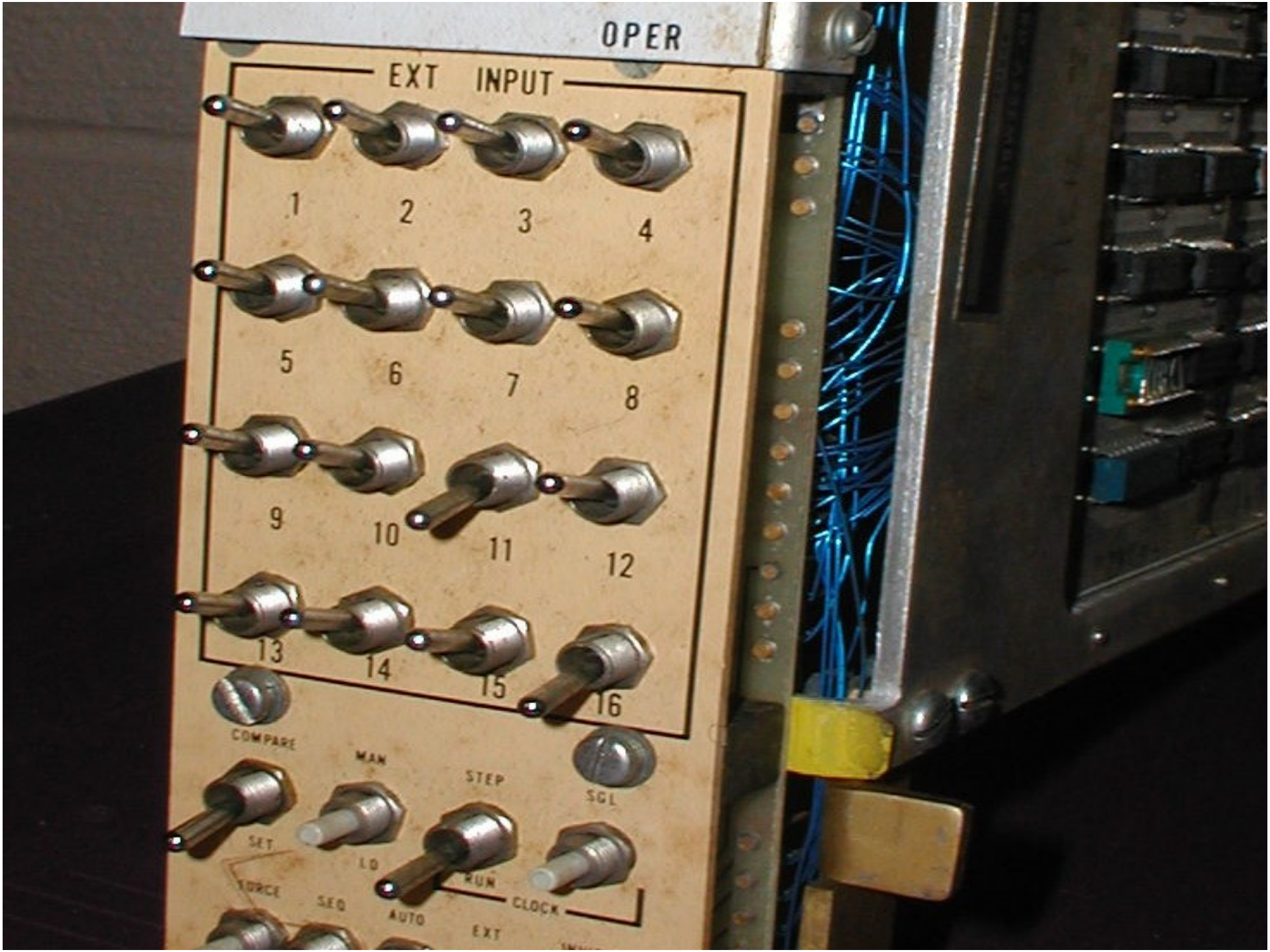
OPER
EXT INPUT
1
2
3
4
5
6
7
8
9
10
11
12
13
14
15
16
COMPARE
MAN
STEP
SGL
SET
LD
RUN
FORCE
SEQ
AUTO
CLOCK
EXT

EDN μP DESIGN SERIES

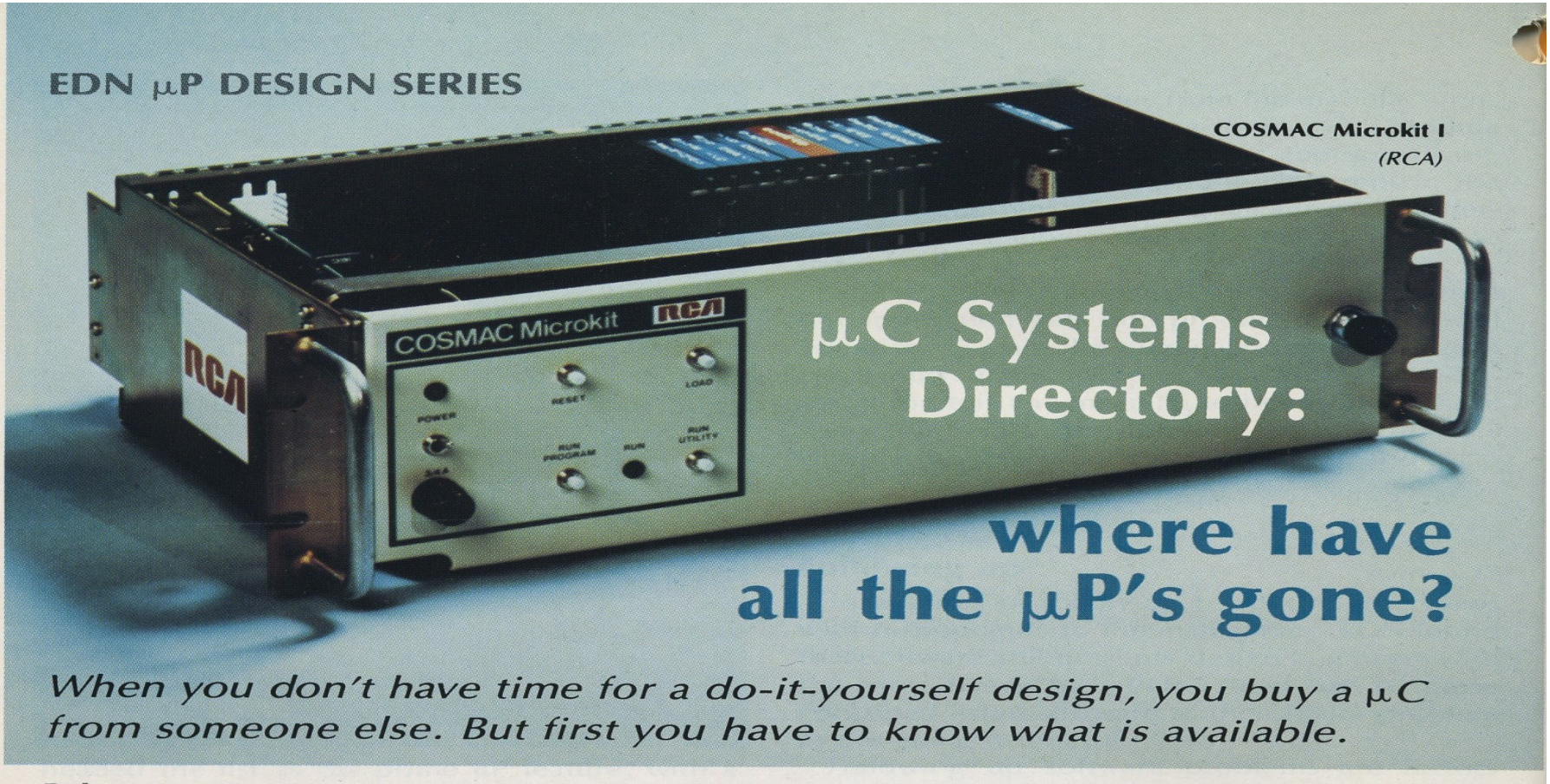

COSMAC Microkit I
(RCA)

μC Systems Directory: where have all the μP's gone?

When you don't have time for a do-it-yourself design, you buy a μC from someone else. But first you have to know what is available.

Robert M. Grossman, Associate Editor

Sometime in the future, with the advantage of perspective, it may be said that the introduction of μP's was one of the great events in electronics. What historians will in all likelihood fail to mention is how time-consuming it was to initially design with them. Like all "radical" highly technological innovations, this is assumed to be the price one has to pay.

But not any longer! It was only a matter of time before someone took his hard-earned knowledge, assembled all the necessary components and produced a complete μC—not just one someone, but many. In fact, early signs indicate that μC systems may surpass even the meteoric rise of the μP.

ing technology, μP's are hard enough to keep up with, let alone get started in using them. The main problem stems from having to turn circuit designers into programmers and vice versa.

Unfortunately, the only effective way of learning how to design with μP's is by hands-on experience. No amount of reading thick specification, operator and application manuals can adequately prepare a user to jump right in and design a μC. He must work with the actual device—and that requires time.

Where does this leave companies that can't afford the time, personnel, or money to reinvent the wheel? What do they do when market pressure forces them to incorporate a μC into

MicroPac 80 *(Process Computer Systems)*

Never heard of the MicroPac 80?

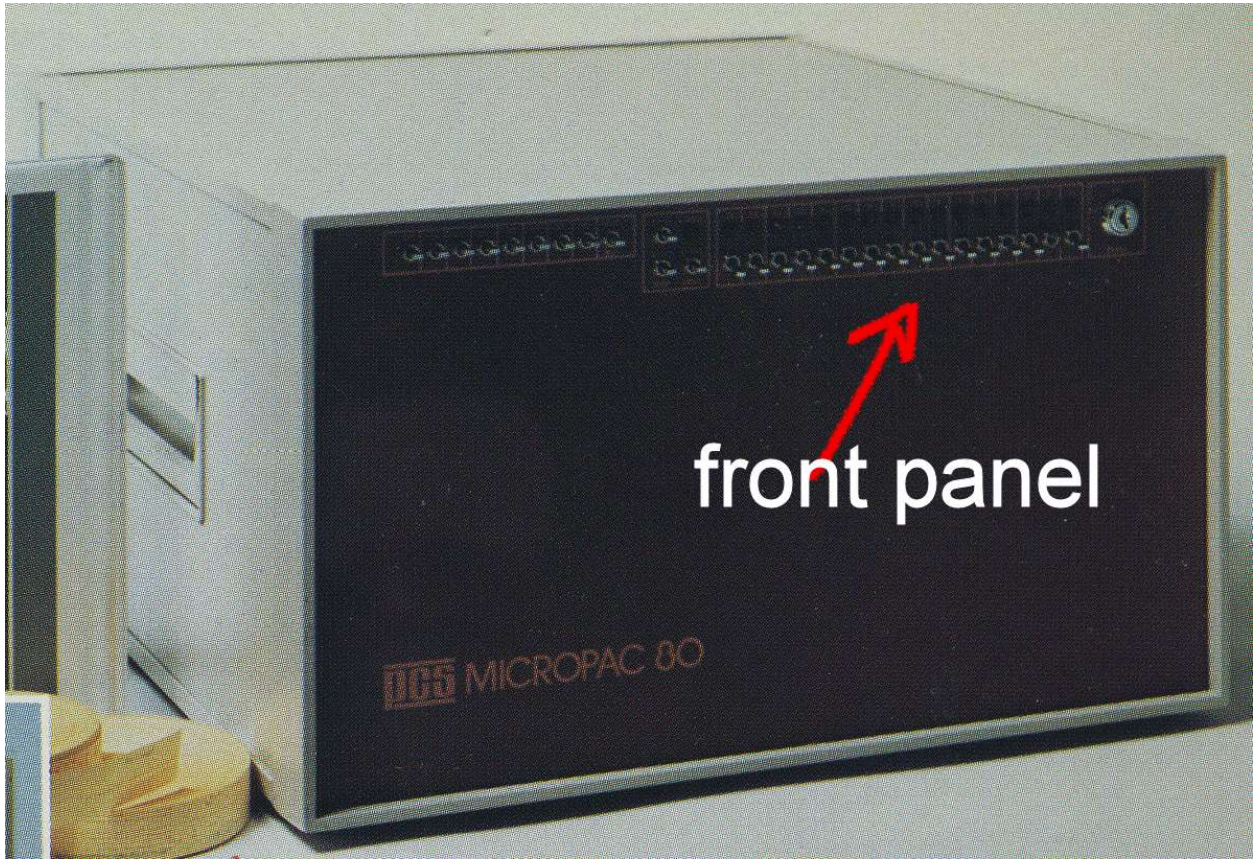

- Intel S910 Processor (8080 prototype)
- Front panel from minicomputer diagnostic
- Teletype I/O and Papertape storage
- Built-in ROM monitor
- Finished December 1973
- Sold early 1974

BILL MURRAY DAN AYKROYD
SIGOURNEY WEAVER
GHOSTBUSTERS
COLUMBIA PICTURES
IVAN REITMAN
BLACK RHINO/BERNIE BRILLSTEIN
"GHOSTBUSTERS"
HAROLD RAMIS RICK MORANIS
ELMER BERNSTEIN "GHOSTBUSTERS"
RAY PARKER, JR.
JOHN DE CUIR
LASZLO KOVACS, A.S.C.
RICHARD EDLUND, A.S.C.
BERNIE BRILLSTEIN
DAN AYKROYD
HAROLD RAMIS
IVAN REITMAN

GRIPPING TALES of SUSPENSE!
AMERICAN COMICS GROUP
ACG
IND
№146
FEBRUARY
ADVENTURES INTO THE
UNKNOWN
APPROVED BY THE COMICS CODE AUTHORITY
12¢
I'VE GOT TO --- DESTROY THAT THING, BEFORE IT GETS ME!
Schaffenberger
A WEIRD SUPERNATURAL STORY --- RIGHT OUT OF THE CHILLING UNKNOWN! DON'T MISS "The GHOST-KILLER WHO VANISHED!"

THERE ARE MANY STRANGE OCCUPATIONS IN THIS WORLD OF OURS···BUT MARK JOHNSON'S WAS ONE OF THE STRANGEST. YOU MIGHT CALL HIM AN ENEMY OF THE UNKNOWN, DEDICATED TO THE DESTRUCTION OF ITS REPRESENTATIVES ON EARTH. HERE'S AN ACCOUNT OF HIS BREATH-TAKING ADVENTURES, IN THE TENSE MYSTERY KNOWN AS···
The GHOST-KILLER who VANISHED!
STORY: KURATO OSAKI
ART: CHIC STONE
THERE ARE SEVERAL APPROVED METHODS OF COMBATTING GHOSTS. IN ANCIENT DAYS, THIS WAS THE ACCEPTED SYSTEM···
THAT, MY DEAR MRS. HAWLEY, IS A TRADE SECRET···MY OWN SPECIAL METHOD. AND, MIGHT I ADD···IT WORKS! YOU MIGHT CALL ME A 20TH CENTURY SPECIALIST IN GHOST-KILLING!
BUT TODAY, OUR CIVILIZATION IS A MECHANIZED ONE. INSTEAD, WE HAVE THINGS LIKE THIS···
1014
MARK JOHNSON AUTOMATIC GHOST-KILLER
THEN YOU'VE VERIFIED THE EXISTENCE OF A SPIRIT ON MY PREMISES, MR. JOHNSON? HOW DO YOU PLAN TO GET RID OF IT? WHAT'S THIS "AUTOMATIC" BUSINESS?
ADVENTURES INTO THE UNKNOWN, published monthly February, March, August, September. Published bi-monthly April-May, June-July, Oct.-Nov., Dec.-Jan. © 1963 by Best Syndicated Features, Inc., Second & Dickey Streets, Sparta, Illinois. All rights reserved under International and Pan-American Copyright Conventions. Editorial offices 331 Madison Avenue, New York 17, N.Y. Richard E. Hughes, Editor, Frederick H. Iger, Business Manager. Subscription (12 issues), $1.44; single copies, $0.12; foreign postage extra. All characters are fictitious and use of any real names is coincidental. For advertising information, address American Comics Group, Inc., 331 Madison Ave., New York 17, N.Y. Second-Class Postage Paid at Sparta, Ill. and at additional mailing offices. Printed in U.S.A.
No. 146, February, 1964

STORY: KURATO OSAKI
ART: CHIC STONE

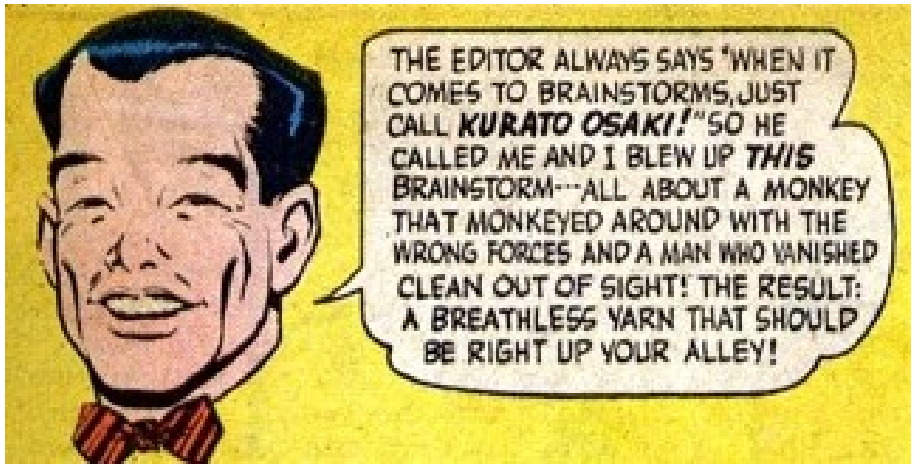
THE EDITOR ALWAYS SAYS "WHEN IT COMES TO BRAINSTORMS, JUST CALL KURATO OSAKI!" SO HE CALLED ME AND I BLEW UP THIS BRAINSTORM···ALL ABOUT A MONKEY THAT MONKEYED AROUND WITH THE WRONG FORCES AND A MAN WHO VANISHED CLEAN OUT OF SIGHT! THE RESULT: A BREATHLESS YARN THAT SHOULD BE RIGHT UP YOUR ALLEY!

IN THESE DAYS, EVERYTHING'S DONE BY MACHINERY. IT WAS SHEER LUCK THAT I DISCOVERED THAT SUPERNATURAL BEINGS CAN FREQUENTLY YIELD TO BOMBARDMENT BY A COMBINATION OF INFRA RED AND GAMMA RAYS...

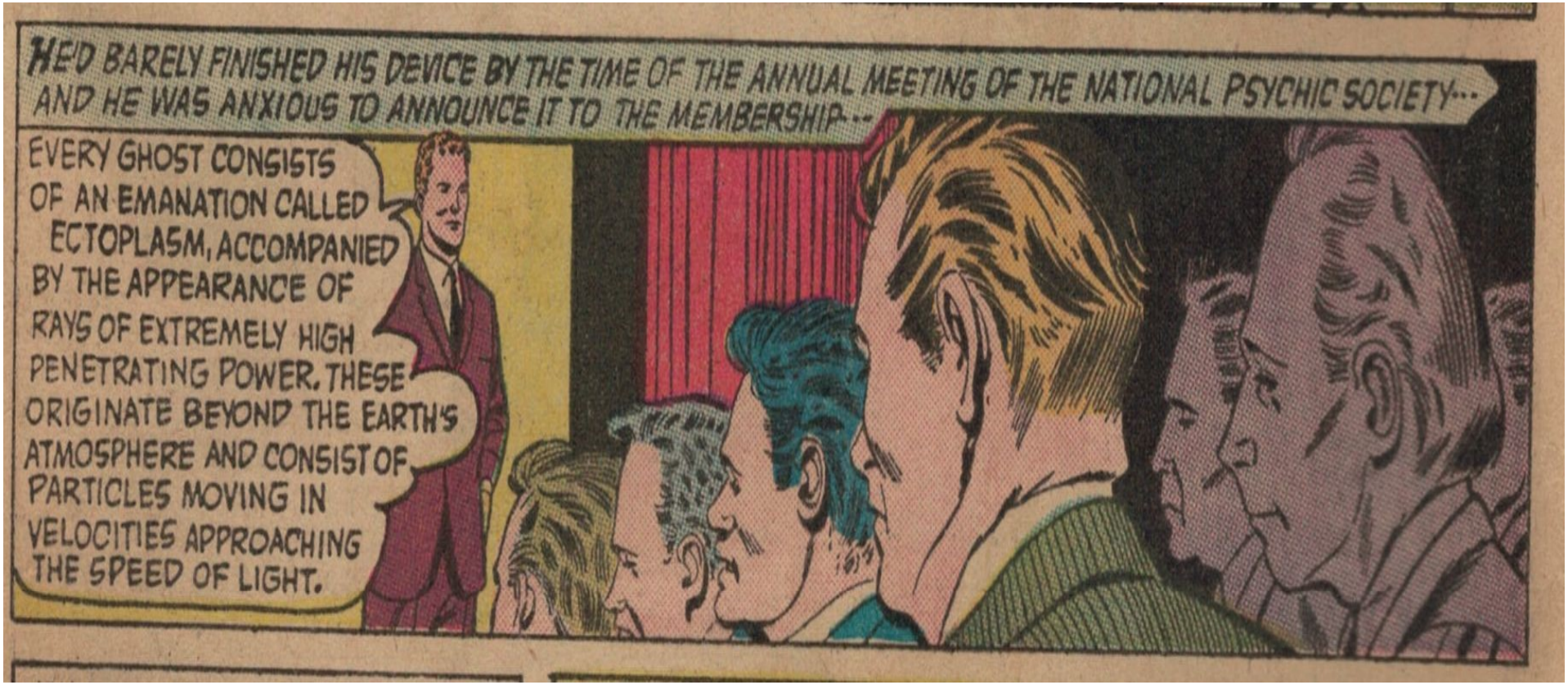
HE'D BARELY FINISHED HIS DEVICE BY THE TIME OF THE ANNUAL MEETING OF THE NATIONAL PSYCHIC SOCIETY... AND HE WAS ANXIOUS TO ANNOUNCE IT TO THE MEMBERSHIP...
EVERY GHOST CONSISTS OF AN EMANATION CALLED ECTOPLASM, ACCOMPANIED BY THE APPEARANCE OF RAYS OF EXTREMELY HIGH PENETRATING POWER. THESE ORIGINATE BEYOND THE EARTH'S ATMOSPHERE AND CONSIST OF PARTICLES MOVING IN VELOCITIES APPROACHING THE SPEED OF LIGHT.

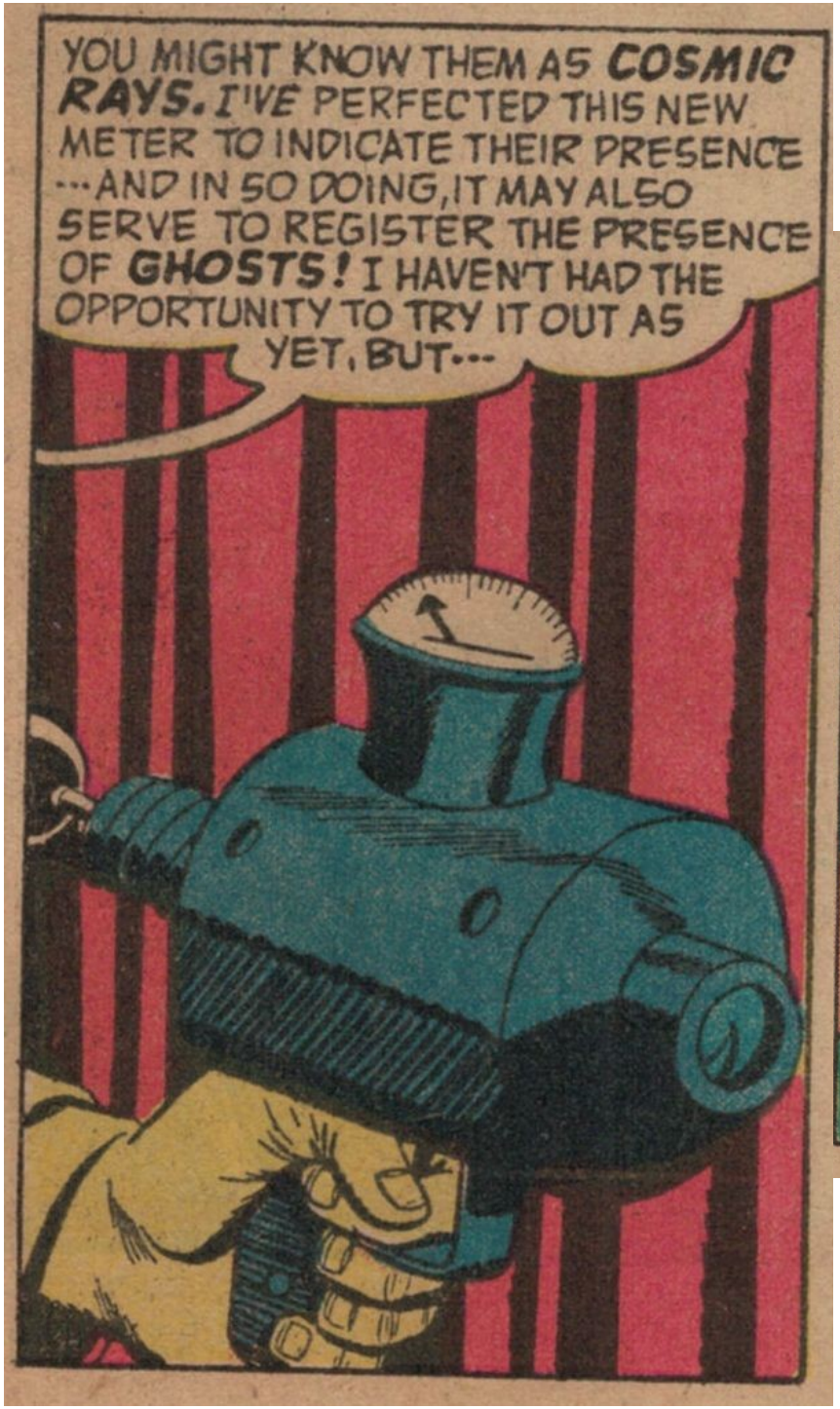
YOU MIGHT KNOW THEM AS COSMIC RAYS. I'VE PERFECTED THIS NEW METER TO INDICATE THEIR PRESENCE ... AND IN SO DOING, IT MAY ALSO SERVE TO REGISTER THE PRESENCE OF GHOSTS! I HAVEN'T HAD THE OPPORTUNITY TO TRY IT OUT AS YET, BUT...

HAW-HAW-HAW!
WHAT RIDICULOUS NONSENSE!
SIT DOWN, YOU PHONY!
SERVES ME RIGHT, I GUESS. I SHOULDN'T HAVE ANNOUNCED IT BEFORE IT HAD BEEN TRIED AND PROVEN ... CHANCES ARE IT WON'T PAN OUT, ANYWAY.
THERE'S A GENTLEMAN WAITING TO SEE YOU, MR. JOHNSON.
2

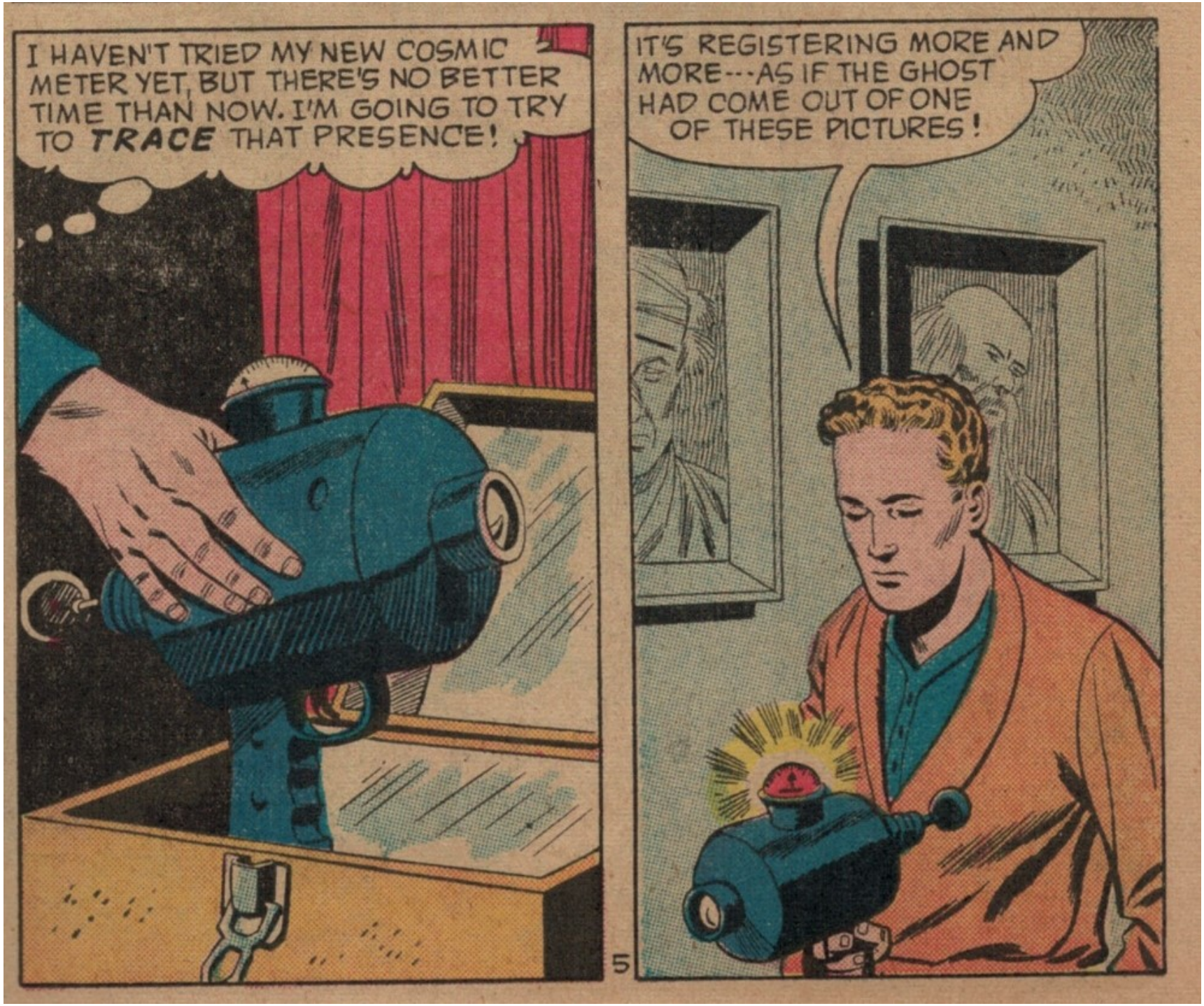
I HAVEN'T TRIED MY NEW COSMIC METER YET, BUT THERE'S NO BETTER TIME THAN NOW. I'M GOING TO TRY TO TRACE THAT PRESENCE!
IT'S REGISTERING MORE AND MORE---AS IF THE GHOST HAD COME OUT OF ONE OF THESE PICTURES!
5

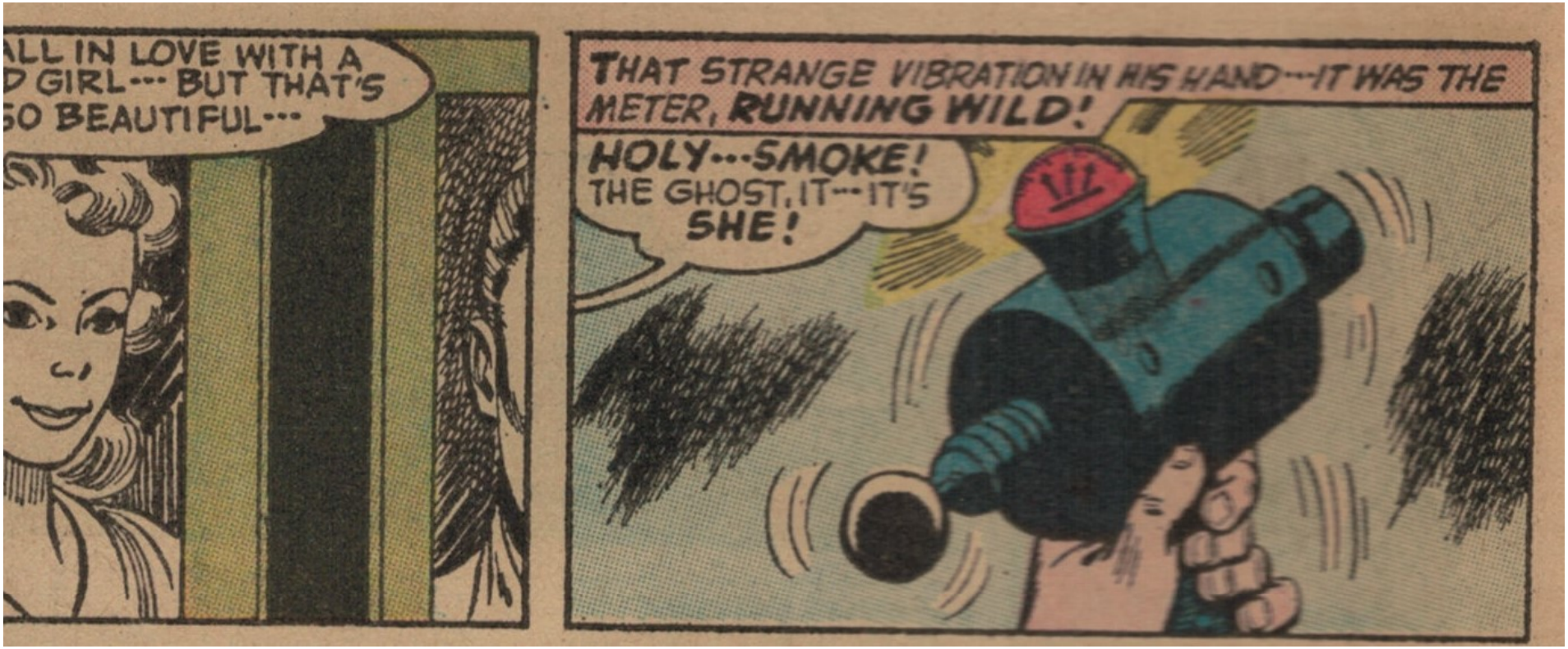
ALL IN LOVE WITH A
D GIRL--- BUT THAT'S
SO BEAUTIFUL---
THAT STRANGE VIBRATION IN HIS HAND---IT WAS THE METER, RUNNING WILD!
HOLY---SMOKE! THE GHOST, IT--- IT'S SHE!

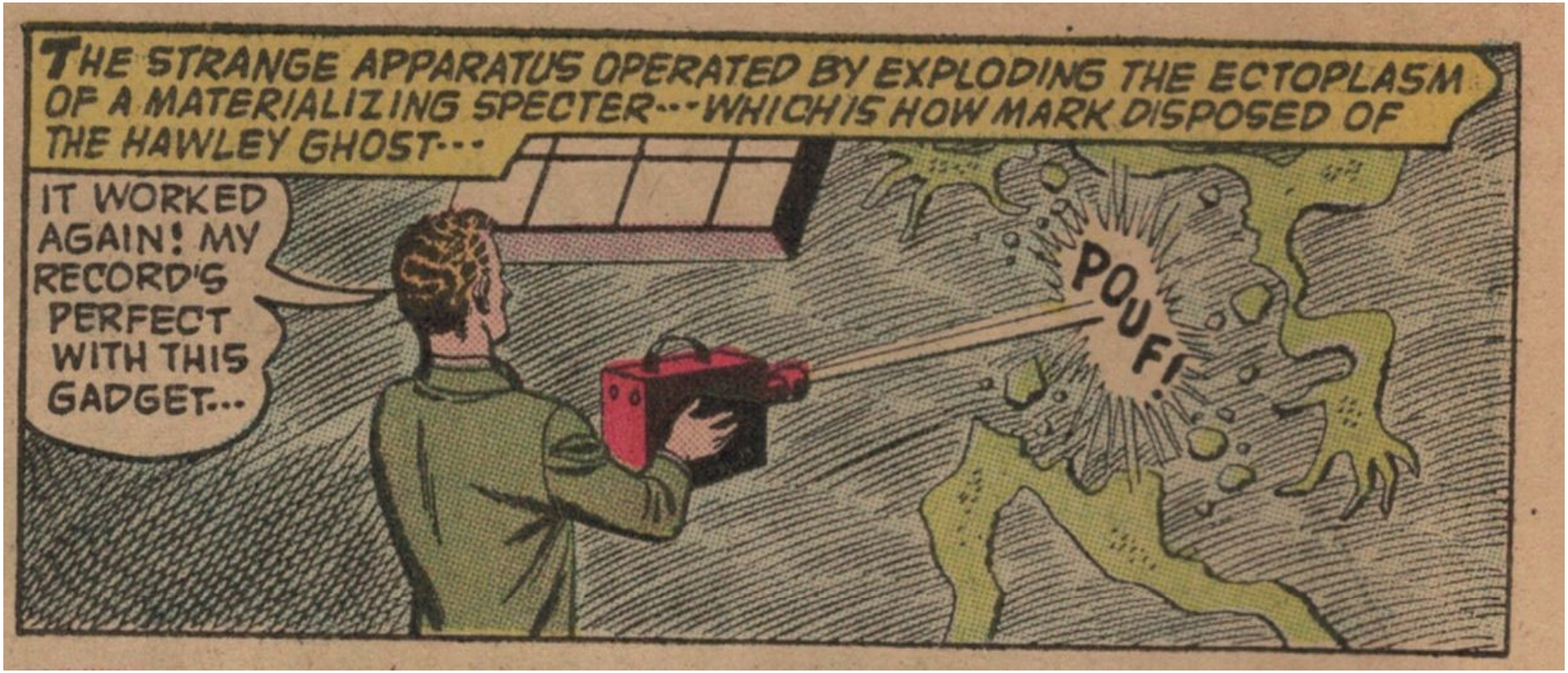
THE STRANGE APPARATUS OPERATED BY EXPLODING THE ECTOPLASM OF A MATERIALIZING SPECTER---WHICH IS HOW MARK DISPOSED OF THE HAWLEY GHOST---
IT WORKED AGAIN! MY RECORD'S PERFECT WITH THIS GADGET...
POUF!

DC
DC
DANISH CRACKERS
Presents
GHOSTBUSTERS
hit any key
DC
DC

GHOSTBUSTERS

GHOSTBUSTERS!

I AIN'T 'FRAID OF NO GHOST!

3TM

DESIGNED BY DAVID CRANE

2. 1963 HEARSE: $4800
CARRIES 9 ITEMS OF CARGO
TOP SPEED 90 MPH

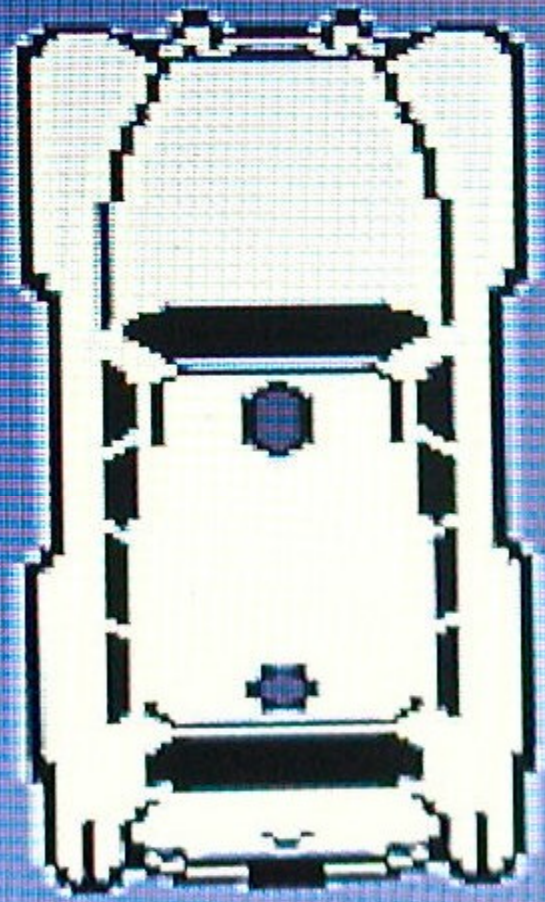

PRESS SPACE BAR TO VIEW CAR OPTIONS.
PRESS 1,2,3 OR 4 TO PURCHASE CAR.

ACTIVISION

--CREDIT--
$2800

MONITORING EQUIPMENT:

PK ENERGY DETECTOR $400

IMAGE INTENSIFIER $800

MARSHMALLOW SENSOR $800

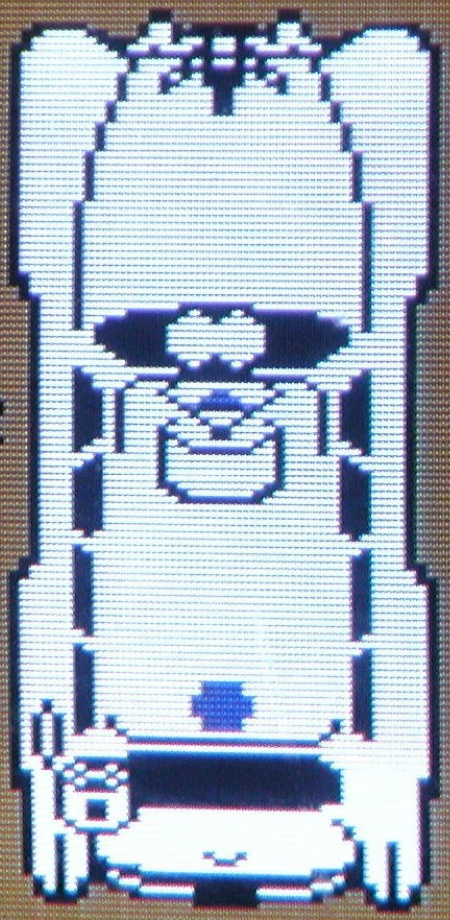

USE JOYSTICK TO CONTROL FORKLIFT.
TYPE: 1-3 FOR MORE CHOICES, E TO END

ACTIVISION

1ST
2ND
3RD
4TH
5TH
PARK AVE
CHURCH ST
ZOO
UNION ST
BROADWAY
GHQ
CITY'S PK ENERGY: 1422
$1000
ACTIVISION

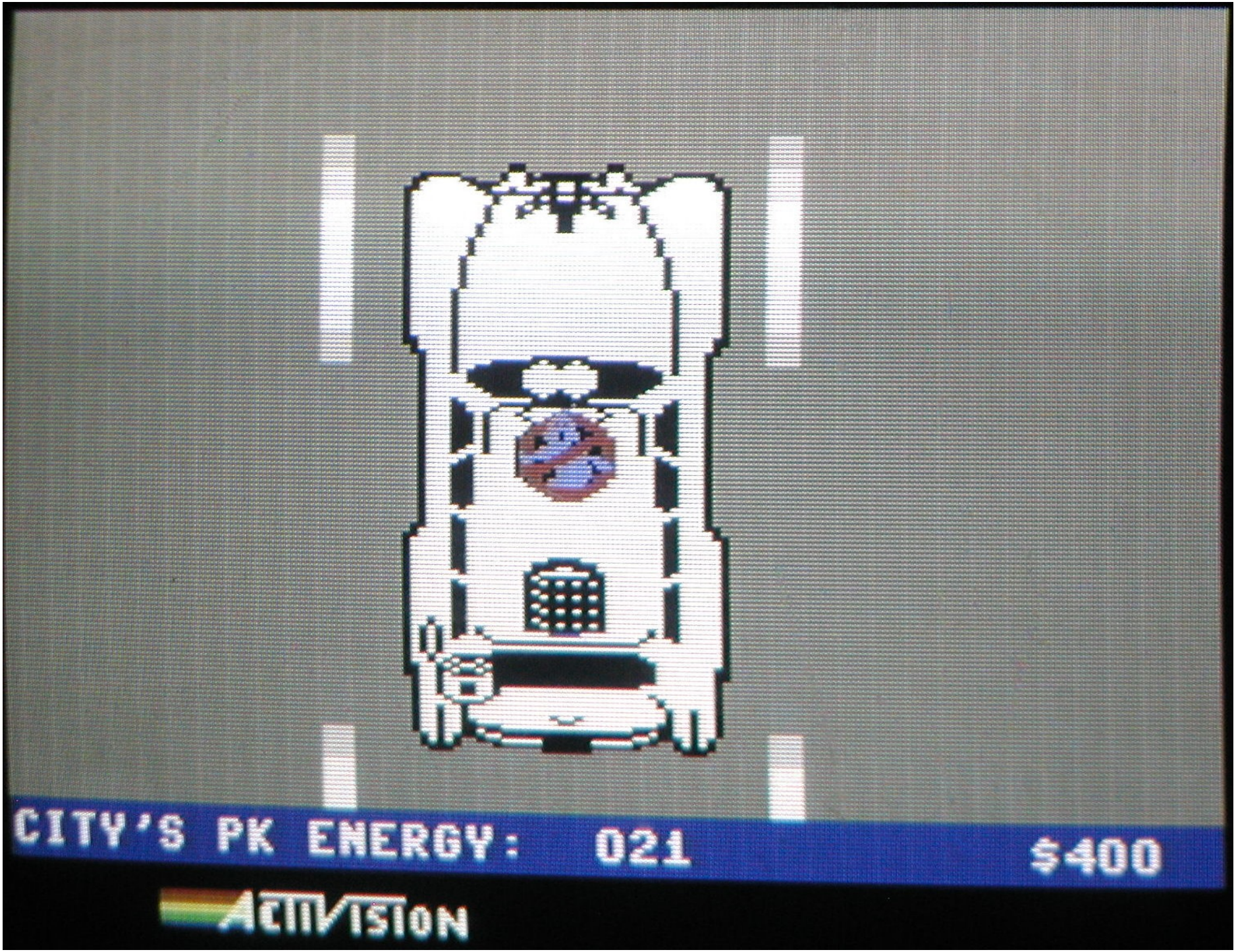
CITY'S PK ENERGY: 021
$400
ACTIVISION

CITY'S PK ENERGY: 1228
$400
ACTIVISION

THE KEYMASTER AND GATEKEEPER ARRIVED AT ZUUL ENDING THE GAME. YOU DIDN'T MAKE ENOUGH MONEY SO THE BANK HAS FORECLOSED. BETTER LUCK NEXT TIME.

STARTING BALANCE: $100000
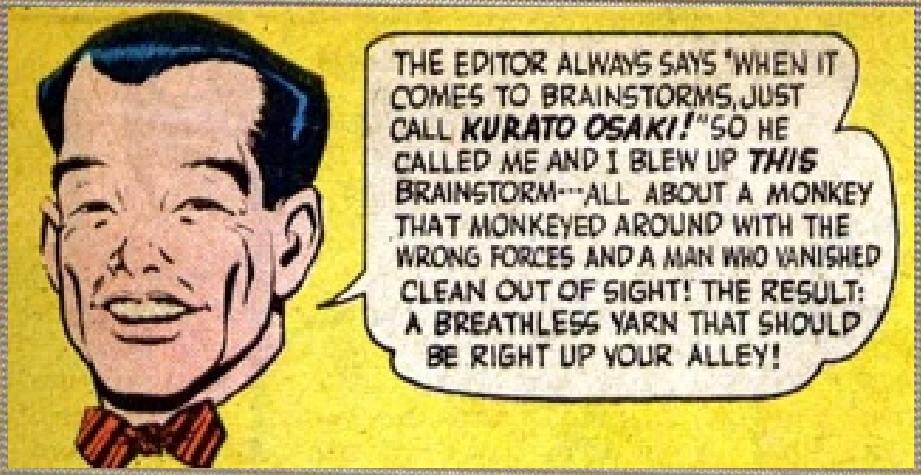
ENDING BALANCE: $1000